Overlapping substrate specificity for sucrose and maltose of two binding protein-dependent sugar uptake systems in *Streptococcus mutans*

Ali O. Kilic[1], Allen L. Honeyman[2] & Lin Tao[1]

[1]Department of Oral Biology, College of Dentistry, University of Illinois at Chicago, Chicago, IL, USA; and [2]Baylor College of Dentistry, Texas A&M University System Health Science Center, Dallas, TX, USA

Correspondence: Lin Tao, Department of Oral Biology, College of Dentistry, University of Illinois at Chicago, 801 South Paulina Street, Chicago, IL 60612, USA. Tel.: +312 355 4077; fax: +312 996 6044; e-mail: ltao@uic.edu

Present address: Ali O. Kilic, American Air Liquide, Chicago Research Center, 5230 S. East Ave, Countryside, IL 60525, USA.

Received 1 August 2006; revised 19 October 2006; accepted 23 October 2006.
First published online 14 November 2006.

DOI:10.1111/j.1574-6968.2006.00522.x

Editor: Wilfrid Mitchell

Keywords
Streptococcus mutans; sucrose; maltose; transport; binding protein-dependent.

Abstract

Sugar metabolism by *Streptococcus mutans* is associated with tooth decay. The most abundant sugars in the human diet are sucrose and maltose, a derivative of starch. Previously, we reported a binding protein-dependent transport system (*msm*) in *S. mutans* that transports sucrose and maltose, but its associated enzymes do not metabolize maltose. By searching the *S. mutans* genomic sequence for a maltose system (*mal*), we found a gene cluster encoding proteins with homology to those of *msm* and the *Escherichia coli* maltose system. Mutants were constructed by deleting *msm* or *mal*, or both, and tested for sugar utilization. Deletion of the *mal* system diminished the ability of *S. mutans* to ferment maltose, but deletion of only the *mal* transporter genes or *msm* showed reduced utilization of chromogenic maltosides. Maltose, sucrose, glucose, fructose, mannose, and *N*-acetyl glucosamine inhibited utilization of chromogenic maltosides by the wild-type strain and mutants. In conclusion, the two binding protein-dependent systems in *S. mutans* appear to transport collaboratively their common substrate sugars, notably sucrose and maltose.

Introduction

Streptococcus mutans and consumption of dietary sucrose have been associated with dental caries (Tanzer *et al.*, 2001). As a result, sucrose metabolism by *S. mutans*, including extracellular production of glucans and intracellular production of storage polysaccharides, has been extensively studied (Kuramitsu, 1993). *Streptococcus mutans* metabolizes sucrose to lactic acid more rapidly than other oral bacteria (Minah & Loesche, 1977). This property is most likely related to its multiple systems for transporting and metabolizing sucrose (Slee & Tanzer, 1982).

Slee & Tanzer (1982) initially reported that *S. mutans* has at least three systems for sucrose uptake: two phosphoenolpyruvate-dependent phosphotransferase systems (PTS), and one non-PTS, the third transport system (TTS). The two PTS systems have different affinities for sucrose. The high-affinity system has been genetically characterized as the *scr* regulon (Lunsford & Macrina, 1986; Sato *et al.*, 1989). *In vivo* testing of an *scr* mutant in rats showed no loss of virulence (Macrina *et al.*, 1991). Poy & Jacobson (1990) reported that the low-affinity sucrose PTS system is the trehalose-specific PTS system (*tre*), which also recognizes sucrose as a substrate. Although the nature of the TTS is not clear, the *S. mutans*-binding protein-dependent system for multiple sugar metabolism (*msm*) was found to transport sucrose (Tao *et al.*, 1993a). Our preliminary studies showed that deletions of genes encoding these three sugar transport systems (*scr, tre*, and *msm*) did not affect the growth of *S. mutans* on sucrose. This suggested that an additional system(s) for efficient utilization of sucrose may exist in *S. mutans*.

At least five enzymes are secreted by *S. mutans* to metabolize sucrose extracellularly (Kuramitsu, 1993). Three glucosyltransferases (GtfB, GtfC, and GtfD) synthesize glucans from sucrose and release free fructose. One fructosyltransferase (Ftf) synthesizes fructan from sucrose and releases free glucose. Fructanase (FruA, exo-β-fructosidase) degrades sucrose because the sugar is structurally both a β-fructoside and α-glucoside (Burne *et al.*, 1987). Collectively, these extracellular enzymes have complicated the study of *S. mutans* sucrose transport.

Besides sucrose, the metabolism of maltosaccharides by *S. mutans* is also important, because they are derived from

© 2006 Federation of European Microbiological Societies
Published by Blackwell Publishing Ltd. All rights reserved

Downloaded from https://academic.oup.com/femsle/article-abstract/266/2/218/565336 by Karadeniz Teknik University Library (KTU) user on 09 June 2020

starch, which is abundant in the human diet. Maltosaccharides are also substrates for synthesis of intracellular polysaccharide (Simpson & Russell, 1998), a key virulence factor of *S. mutans* (Spatafora *et al.*, 1995). Although a system specifically for transport and metabolism of maltosaccharides has been identified in other bacteria, such as *Escherichia coli* (Dippel & Boos, 2005), a similar system has not yet been reported in *S. mutans*.

Studies in a number of other microorganisms showed that sucrose can be utilized by systems specific for α-glucosides, such as maltose. These organisms include *Staphylococcus xylosus* (Egeter & Bruckner, 1995), *Sinorhizobium (Si.) meliloti* (Jensen *et al.*, 2002), *Actinoplanes* (Brunkhorst & Schneider, 2005), *Thermus thermophilus* (Silva *et al.*, 2005), *Saccharomyces cerevisiae* (Stambuk *et al.*, 1999), and *Candida albicans* (Williamson *et al.*, 1993).

The *S. mutans msm* system transports and metabolizes raffinose, melibiose, stachyose, isomaltosaccharides, palatinose, panose, and sucrose (Tao *et al.*, 1993a). It also transports but does not metabolize maltosaccharides, glucose, fructose, and galactose. Because an *msm* deletion mutant can still ferment maltosaccharides, at least one additional system may exist in *S. mutans* specifically for the transport and metabolism of this group of sugars. The aims of the present study were to identify such a system and to study its interaction with the *msm* system in transporting the sugars sucrose and maltose.

Materials and methods

Strains, plasmids, and culture media

The bacterial strains and plasmids used in this study are listed in Table 1. *Streptococcus mutans* was grown at 37 °C in Jordan medium (Jordan *et al.*, 1960), Todd–Hewitt broth (THB), or purple broth (Difco) supplemented with 0.5% glucose, maltose, or other sugars as specified. On agar plates, the cultures were incubated in a candle jar. To select for antibiotic resistance marker-inactivated mutants of *S. mutans*, antibiotics were added as follows: erythromycin (Em), 15 μg mL^{-1}; tetracycline (Tc), 15 μg mL^{-1}; or kanamycin (Km), 350 μg mL^{-1}.

Mutant construction

For construction of the *mal* regulon-deletion mutant, DNA fragments of the *malP* and *malK* genes, located at the two extremities of the regulon, were amplified by PCR with primers: malF1 (5′-CATCCGGATCATTATTGATAAGCT-3′) and malR1 (5′-CCATTATTGAACATCTAGACC-3′); and malF2 (5′-TAATGCGGATCCAGGTTCTGTACTGATCGCC ATTC-3′) and malR2 (5′-AGAATTTACGCAGCTTCGTGT ACA-3′). malR1 includes an existing *Xba*I site, while malF2 includes an added *Bam*HI site. The two amplicons digested with *Xba*I and *Bam*HI, respectively, were ligated overnight at 16 °C with the Km resistance (Km^R) cassette derived from pSJ170 (a gift from Moses N. Vijayakumar, Oklahoma State University, unpublished) digested with the same enzymes. The ligation mixture was used to transform *S. mutans* LT11 (Tao *et al.*, 1993b). Transformants were selected on THB agar supplemented with Km after incubation at 37 °C for 24 h and tested for maltose fermentation in purple broth. Gene deletion was verified by PCR. An *mal* deletion mutant was selected and named Cm111.

For construction of the *mal* transporter (*malEFGK*) deletion mutant, fragments of the *malE* and *malK* genes were amplified by PCR with two pairs of primers, malF3 (5′-GAATCAGATATTAACCAGATTGAA-3′), malR3 (5′-GCG AATCTAGATCTGCAGCAGTACTAGGATC-3′), malF2 and malR2. The two amplicons digested with *Xba*I and *Bam*HI, respectively, were ligated with the Em resistance (Em^R) cassette derived from pAK491 [constructed by inserting the Em^R gene of pVA891 (Macrina *et al.*, 1983) into pBluescript] digested with the same enzymes. The ligation mix was amplified by PCR with the primers malF3 and malR2. The amplified DNA was used to transform *S. mutans* LT11 to

Table 1. Bacterial strains and plasmids used in the study

Strain/Plasmid	Description/Genotype	Source
S. mutans		
LT11	Wild-type	Tao *et al*. (1993b)
SF130	LT11 (Δ*msm*, Tc^R)	Tao *et al*. (1993a)
Cm111	LT11 (Δ*malEFGK*, Δ*malRQP*, Km^R)	This study
Cm112	LT11 (Δ*malEFGK*, Em^R)	This study
ALH105	Wild-type NG8	A. Honeyman
ALH698	ALH105 (*msmE*::Ω*Kan2*, Km^R)	This study
ALH698M	ALH105 (*msmE*::Ω*Kan2*,Δ*malEFGK*, Km^R, Em^R)	This study
Plasmid		
pALH124	pUC7 derivative with a promoterless Km^R	A. Honeyman
pSJ170	Km^R cassette, Amp^R	M. Vijayakumar
pAK491	Em^R cassette, Amp^R	This study

© 2006 Federation of European Microbiological Societies
Published by Blackwell Publishing Ltd. All rights reserved

Downloaded from https://academic.oup.com/femsle/article-abstract/266/2/218/565336 by Karadeniz Teknik University Library (KTU) user on 09 June 2020

Em^R. Gene deletion was verified with PCR. One mutant was selected and named as Cm112.

A promoterless Km^R marker (ΩKan2) derived from pALH124 was used for insertion into the *msmE* gene (Cote & Honeyman, 2003). In the resulting mutant, the *aga* gene encoding the galactosidase was intact, while the gene encoding the sugar-binding protein, *msmE,* was inactivated. The mutant was named ALH698. An *msm*-deletion mutant, SF130, was already available from a previous study (Tao *et al.*, 1993a). For the construction of a double mutant with defects in both *mal* and *msm* transporters, chromosomal DNA of Cm112 was used to transform ALH698. A transformant with both Km^R and Em^R phenotypes was selected and named ALH698M.

Sugar utilization analysis

To test for maltose fermentation, overnight cultures of wild type and mutants in THB were spun down and washed twice with phosphate-buffered saline (PBS; pH 7.0) and resuspended in purple broth supplemented with various amounts of maltose, ranging from 0.05% to 0.5%. Following incubation at 37 °C, color changes were recorded as a function of time.

To test for utilization (transport and metabolism) of other sugars, two chromogenic sugars (Sigma) were used: 4-nitrophenyl α-D-maltoside (NPG2) and 4-nitrophenyl α-D-maltohexaoside (NPG6). Various nonchromogenic, unconjugated sugars (Sigma) were used as competitors. The reaction mixture included 1 mM chromogenic sugar, 10 mM competing sugar, and 100 mM sodium phosphate buffer (pH 7.0). Overnight *S. mutans* cultures in THB were diluted 1 : 50 in 5 mL Jordan broth supplemented with either 0.5% glucose or maltose as an inducing sugar, and grown for 3 h to the mid-exponential phase. The cells were washed three times and resuspended in 100 mM sodium phosphate buffer (pH 7), adjusting the cell concentration to $OD_{600\,nm} = 0.5$. One milliliter was centrifuged and resuspended in 0.5 mL chromogenic sugar reaction mix. Following incubation at 37 °C for 3 h, 1 mL 0.6 M Na_2CO_3 was added to stop the reaction. The cells were removed by centrifugation, and the yellow color of the supernatant was measured with a spectrophotometer (Spectronic® 20 Genesys™) at 420 nm to monitor the release of 4-nitrophenol. A standard curve was obtained using 4-nitrophenol (Sigma) at 500, 400, 300, 200, 100, 50, 25, and 0 μM in 100 mM sodium phosphate buffer (pH 7) with 2 vol of 0.6 M Na_2CO_3.

Results and discussion

A binding protein-dependent transport system for maltosaccharides in *S. mutans*

To identify genes that encode a binding protein-dependent transport system for maltosaccharide in *S. mutans*, we used the amino acid sequence data (Russell *et al.*, 1991) of the four *msm* transporter proteins, MsmE, MsmF, MsmG, and MsmK, to search the *S. mutans* genome (Ajdic *et al.*, 2002) at the University of Oklahoma website (http://www.genome.ou.edu/smutans.html) with the BLAST program. A gene cluster was identified with similarities to the transport module of *S. mutans msm* and *E. coli mal* (Blattner *et al.*, 1997; Fig. 1). It includes four genes: *malE* (putative sugar-binding protein), *malF* and *malG* (putative sugar transporter membrane components), and *malK* (putative ATP-binding protein). We refer to this gene cluster as *malEFGK*. Divergently oriented from this locus, separated by only 246 bases, is another gene cluster. It includes three genes: *malR* (putative regulator), *malQ* (putative amylomaltase), and *malP* (putative maltodextrin phosphorylase) homologous to *E. coli mal* genes. We refer to this gene cluster as *malRQP*. Collectively, we refer to these two gene clusters as the *mal* locus.

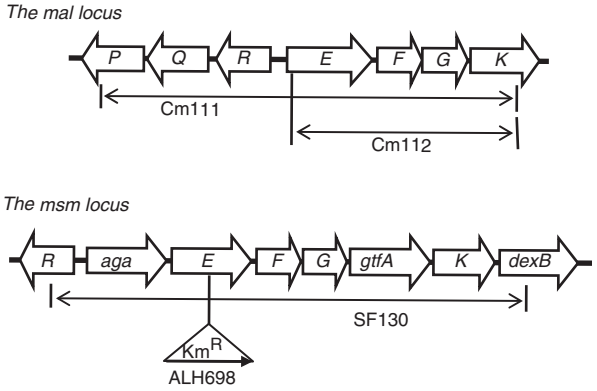

Fig. 1. Schematic representation of gene organizations of the *Streptococcus mutans mal* locus (SMU1564-1571) and *msm* locus. Arrows indicate the direction of transcription. Mutants with specific gene-deletions or insertion are indicated.

The *mal* locus is involved in efficient utilization of maltose

The *mal* locus-deletion mutant Cm111 (Δ*malEFGK,* Δ*malRQP*) did not ferment 0.1% maltose in purple broth, although fermention of 0.5% maltose was detected after 24 h of incubation. The wild-type strain LT11 rapidly fermented maltose at both concentrations (the purple color changed in 15 min). Therefore, the *mal* locus may be required for rapid growth of *S. mutans* in maltose because deletion of this locus caused impairment of maltose utilization by *S. mutans*. In general, all strains tested, except Cm111 (Δ*mal*) previously grown in Jordan medium with maltose as the sole carbon source, fermented maltose about two-fold more efficiently than cells grown in the same medium with glucose as the sole carbon source (data not shown). Although genes encoding malto-amylase (Simpson & Russell, 1998) and

© 2006 Federation of European Microbiological Societies
Published by Blackwell Publishing Ltd. All rights reserved

Downloaded from https://academic.oup.com/femsle/article-abstract/266/2/218/565336 by Karadeniz Teknik University Library (KTU) user on 09 June 2020

glycogen phosphorylase (Ajdic *et al.*, 2002) exist in *S. mutans* outside the *mal* locus, these enzymes might not be highly efficient in maltose hydrolysis. Nonetheless, their activities might explain why the *mal*-deletion mutant could still grow in 0.5% maltose-supplemented purple broth at a much reduced rate. To our knowledge, this is the first report of a binding protein-dependent transport system for maltose utilization by *S. mutans*.

Both *msm* and *mal* transporters are involved in transporting maltosaccharides

When *S. mutans* LT11 (wt) and Cm112 (Δ*malEFGK*) were grown in purple broth supplemented with 0.05%, 0.1%, 0.2%, or 0.5% maltose, there was no detectable difference in their abilities to ferment maltose. This suggested that at least one additional system in *S. mutans* also transported maltose efficiently. We previously observed that multiple sugars, including maltose and maltotriose, competitively inhibited [H^3]-melibiose uptake by the *S. mutans msm* transporter (Tao *et al.*, 1993a). This suggested that the *msm* transporter might also recognize maltose. However, the role of *msm* in maltose transport had not been confirmed by a direct approach. With chromogenic maltoside, we evaluated the roles of *msm* and *mal* transporters in the uptake of maltose by *S. mutans*. As shown in Fig. 2(a), the two wild-type strains (LT11 and ALH105) were not detectably different in their utilization of chromogenic maltoside (NPG2). Their respective *msm*-deletion and *msmE*-insertion mutants, SF130 and ALH698, both had only about a 25% wild-type level of NPG2 utilization. The *malEFGK* deletion mutant Cm112 had about a 45% wild-type level of NPG2 utilization. The *msm* and *mal* double transporter mutant, ALH698M, had only 15% of wild-type levels of NPG2 utilization. These data suggested that both *msm* and *mal* transporters are required for efficient uptake of maltosaccharides, and that the *msm* transporter might transport maltosaccharides more efficiently than the *mal* transporter. Because the double transporter mutant could still utilize maltose, there might be yet another system(s) in *S. mutans* that could transport maltosaccharides, albeit at a much reduced rate.

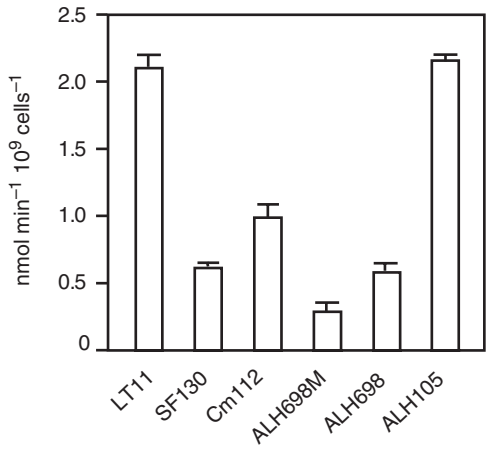

Fig. 2. Utilization of NPG2 by *Streptococcus mutans* strains. Data are presented as 4-nitrophenol release in nmole min^{-1} 10^{-9} cells. Bar represents SD.

The *mal* transporter takes up multiple sugars, including sucrose and maltose

Owing to the similarity between the transporters encoded by *msm* and *mal*, it is likely that the *mal* system could also transport multiple sugars. We selected two chromogenic maltosaccharides, NPG2 and NPG6, for testing. Inhibition studies with nonchromogenic sugars would suggest competition for transport and/or metabolism. As shown in Table 2, 15 sugars were tested against the utilization of chromogenic maltosides (NPG2 and NPG6) by three *S. mutans* strains: LT11 (wt), SF130 (Δ*msm*), in which the only remaining major transporter for maltosaccharides is MalEFGK, and ALH698M (Δ*malEFGK, msmE*).

In the absence of competing sugars, NPG2 metabolism by SF130, in comparison with LT11, released about one half of the chromogen. Interestingly, the metabolism of NPG6 was reduced about 8-fold. Melibiose and raffinose strongly inhibited NPG6 but not NPG2 utilization by LT11. These results suggested that the *msm* transporter may contribute more to transport of higher molecular weight maltosaccharides. When competing sugars were tested,

Table 2. Effect of various competing sugars on the utilization of chromogenic maltosides*

	LT11		SF130		ALH698M
Competitor	NPG2	NPG6	NPG2	NPG6	NPG2
None	1.05	0.61	0.58	0.08	0.08
Cellobiose	0.89	0.14	0.61	0.03	0.06
Fructose	0.67	0.02	0.10	0.00	0.08
Galactose	0.89	0.20	0.30	0.04	0.05
Glucose	0.22	0.01	0.07	0.01	0.02
Lactose	1.05	0.11	0.29	0.02	0.07
Maltose	0.02	0.01	0.01	0.00	0.01
Mannitol	1.05	0.17	0.33	0.01	0.07
Mannose	0.22	0.02	0.08	0.02	0.02
Melibiose	0.86	0.07	0.61	0.07	0.08
NAG	0.33	0.13	0.24	0.01	0.04
Palatinose	1.05	0.47	0.53	0.07	0.09
Raffinose	1.05	0.04	0.61	0.08	0.07
Sorbitol	1.05	0.31	0.52	0.03	0.07
Sucrose	0.09	0.01	0.08	0.01	0.01
Trehalose	0.30	0.02	0.56	0.07	0.03

*Data represent the mean of two separate experiments with the rate of 4-nitrophenol release presented as nmole min^{-1} 10^{-9} cells.
NAG, *N*-acetyl glucosamine.

© 2006 Federation of European Microbiological Societies
Published by Blackwell Publishing Ltd. All rights reserved

Downloaded from https://academic.oup.com/femsle/article-abstract/266/2/218/565336 by Karadeniz Teknik University Library (KTU) user on 09 June 2020

sucrose was the strongest competitor besides maltose against the utilization of the two chromogenic maltosides. This suggested that the *mal* system may also recognize sucrose as a substrate. Other competing sugars displaying inhibition against utilization of chromogenic maltosides by SF130 included fructose, glucose, mannose, and *N*-acetylglucosamine (NAG). The double transporter mutant ALH698M also showed a low level of NPG2 utilization, which was inhibited by maltose, sucrose, glucose, mannose, trehalose, and NAG. This suggested that systems for utilization of these sugars might transport maltose at low levels.

Streptococcus mutans has two separate binding protein-dependent sugar transport systems for transporting sucrose, maltose, and several other sugars. Likewise, two similar systems have also been reported in the soil bacteria *Si. meliloti* (Jensen *et al.*, 2002) and *Actinoplanes* (Brunkhorst & Schneider, 2005). Sugar transport systems are critical for bacterial nutrient acquisition in their ecological environment. Photosynthetically derived sucrose is the main source of carbon for legume root nodules (Jensen *et al.*, 2002). Notably, these soil bacteria have two mutually collaborative sugar transport systems. Sucrose and starch are the most common sources of dietary carbohydrates for humans. The presence in *S. mutans* of two apparently collaborative systems to transport sucrose and maltosaccharides may contribute to its ecological success on the surface of teeth in hosts consuming sucrose and starch. It is of particular interest that the gene organization of the two sugar transport systems in *Si. meliloti* is remarkably similar to those found in *S. mutans*. As no PTS-associated sucrose transport activity has been found in rhizobia (Martinez-de Drets *et al.*, 1974), binding protein-dependent sugar uptake is the major mechanism for *Si. meliloti* to transport sugars. In contrast, *S. mutans* has two PTS systems for additional sucrose transport (Slee & Tanzer, 1982), which are important for nutrient acquisition. Unlike sucrose in plant roots, which is consistently available to symbiotically colonized soil bacteria, *S. mutans* is only transiently exposed to the supply of dietary carbohydrates during the meal time of the host. At least four transporters for sucrose and two transporters for maltosaccharides allow *S. mutans* to take up these important sugars more rapidly when they are only briefly available. The ability to transport sucrose and maltosaccharides by two mutually collaborative binding protein-dependent transport systems may thus contribute to efficient nutrient acquisition and pathogenicity of *S. mutans*. Further studies will be needed to better understand these two sugar transport systems.

Acknowledgement

We thank Moses N. Vijayakumar for providing us with kanamycin gene cassette plasmid, pSJ170. We also thank Jason Tanzer for critical by reading and editing the manuscript. This study was supported by Health Service Grants DE11400 to LT and DE10890 to ALH.

References

Ajdic D, McShan WM, McLaughlin RE *et al.* (2002) Genome sequence of *Streptococcus mutans* UA159, a cariogenic dental pathogen. *Proc Natl Acad Sci USA* **99**: 14434–14439.

Blattner FR, Plunkett III G & Bloch CA (1997) The complete genome sequence of *Escherichia coli* K-12. *Science* **277**: 1453–1474.

Brunkhorst C & Schneider E (2005) Characterization of maltose and maltotriose transport in the acarbose-producing bacterium *Actinoplanes* sp. *Res Microbiol* **156**: 851–857.

Burne RA, Schilling K, Bowen WH & Yasbin RE (1987) Expression, purification, and characterization of an exo-beta-D-fructosidase of *Streptococcus mutans*. *J Bacteriol* **169**: 4507–4517.

Cote CK & Honeyman AL (2003) The LicT protein acts as both a positive and a negative regulator of loci within the *bgl* regulon of *Streptococcus mutans*. *Microbiology* **149**: 1333–1340.

Dippel R & Boos W (2005) The maltodextrin system of *Escherichia coli*: metabolism and transport. *J Bacteriol* **187**: 8322–8331.

Egeter O & Bruckner R (1995) Characterization of a genetic locus essential for maltose-maltotriose utilization in *Staphylococcus xylosus*. *J Bacteriol.* **177**: 2408–2415.

Jensen JB, Peters NK & Bhuvaneswari TV (2002) Redundancy in periplasmic binding protein-dependent transport systems for trehalose, sucrose, and maltose in *Sinorhizobium meliloti*. *J Bacteriol* **184**: 2978–2986.

Jordan HV, Fitzgerald RJ & Bowler AE (1960) Inhibition of experimental caries by sodium metabisulfite and its effect on the growth and metabolism of selected bacteria. *J Dent Res* **39**: 116–123.

Kuramitsu HK (1993) Virulence factors of mutans streptococci: role of molecular genetics. *Crit Rev Oral Biol Med* **4**: 159–176.

Lunsford RD & Macrina FL (1986) Molecular cloning and characterization of *scrB*, the structural gene for the *Streptococcus mutans* phosphoenolpyruvate-dependent sucrose phosphotransferase system sucrose-6-phosphate hydrolase. *J Bacteriol* **166**: 426–434.

Macrina FL, Evans RP, Tobian JA, Hartley DL, Clewell DB & Jones KR (1983) Novel shuttle plasmid vehicles for *Escherichia-Streptococcus* transgeneric cloning. *Gene* **25**: 145–150.

Macrina FL, Jones KR, Alpert CA, Chassy BM & Michalek SM (1991) Repeated DNA sequence involved in mutations affecting transport of sucrose into *Streptococcus mutans* V403 via the phosphoenolpyruvate phosphotransferase system. *Infect Immun* **59**: 1535–1543.

Martinez-de Drets G, Arias A & Rovira-de Cutinella M (1974) Fast- and slow-growing rhizobia: differences in sucrose utilization and invertase activity. *Can J Microbiol* **20**: 605–609.

© 2006 Federation of European Microbiological Societies
Published by Blackwell Publishing Ltd. All rights reserved

Downloaded from https://academic.oup.com/femsle/article-abstract/266/2/218/565336 by Karadeniz Teknik University Library (KTU) user on 09 June 2020

Minah GE & Loesche WJ (1977) Sucrose metabolism by prominent members of the flora isolated from cariogenic and non-cariogenic dental plaques. *Infect Immun* **17**: 55–61.

Poy F & Jacobson GR (1990) Evidence that a low-affinity sucrose phosphotransferase activity in *Streptococcus mutans* GS-5 is a high-affinity trehalose uptake system. *Infect Immun* **58**: 1479–1480.

Russell RR, Aduse-Opoku J, Sutcliffe IC, Tao L & Ferretti JJ (1991) A binding protein-dependent transport system in *Streptococcus mutans* responsible for multiple sugar metabolism. *J Biol Chem* **267**: 4631–4637.

Sato Y, Poy F, Jacobson GR & Kuramitsu HK (1989) Characterization and sequence analysis of the *scrA* gene encoding enzyme II^{Scr} of the *Streptococcus mutans* phosphoenolpyruvate-dependent sucrose phosphotransferase system. *J Bacteriol* **171**: 263–271.

Simpson CL & Russell RR (1998) Intracellular alpha-amylase of *Streptococcus mutans*. *J Bacteriol* **180**: 4711–4717.

Silva Z, Sampaio MM, Henne A, Bohm B, Gutzat R, Boos W, da Costa MS & Santos H (2005) The high-affinity maltose/trehalose ABC transporter in the extremely thermophilic bacterium *Thermus thermophilus* HB27 also recognizes sucrose and palatinose. *J Bacteriol* **187**: 1210–1218.

Slee AM & Tanzer JM (1982) Sucrose transport by *Streptococcus mutans*. Evidence for multiple transport systems. *Biochim Biophys Acta* **692**: 415–424.

Spatafora G, Rohrer K, Barnard D & Michalek S (1995) A *Streptococcus mutans* mutant that synthesizes elevated levels of intracellular polysaccharide is hypercariogenic *in vivo*. *Infect Immun* **63**: 2556–2563.

Stambuk BU, da Silva MA, Panek AD & de Araujo PS (1999) Active alpha-glucoside transport in *Saccharomyces cerevisiae*. *FEMS Microbiol Lett* **170**: 105–110.

Tanzer JM, Livingston J & Thompson AM (2001) The microbiology of primary dental caries in humans. *J Dent Educ* **65**: 1028–1037.

Tao L, Sutcliffe IC, Russell RR & Ferretti JJ (1993a) Transport of sugars, including sucrose, by the *msm* transport system of *Streptococcus mutans*. *J Dent Res* **72**: 1386–1390.

Tao L, Tanzer JM & MacAlister TJ (1993b) Transformation efficiency of EMS-induced mutants of *Streptococcus mutans*. *J Dent Res* **72**: 1032–1039.

Williamson PR, Huber MA & Bennett JE (1993) Role of maltase in the utilization of sucrose by *Candida albicans*. *Biochem J* **291**: 765–771.

Downloaded from https://academic.oup.com/femsle/article-abstract/266/2/218/565336 by Karadeniz Teknik University Library (KTU) user on 09 June 2020

© 2006 Federation of European Microbiological Societies
Published by Blackwell Publishing Ltd. All rights reserved